BLIZZARD

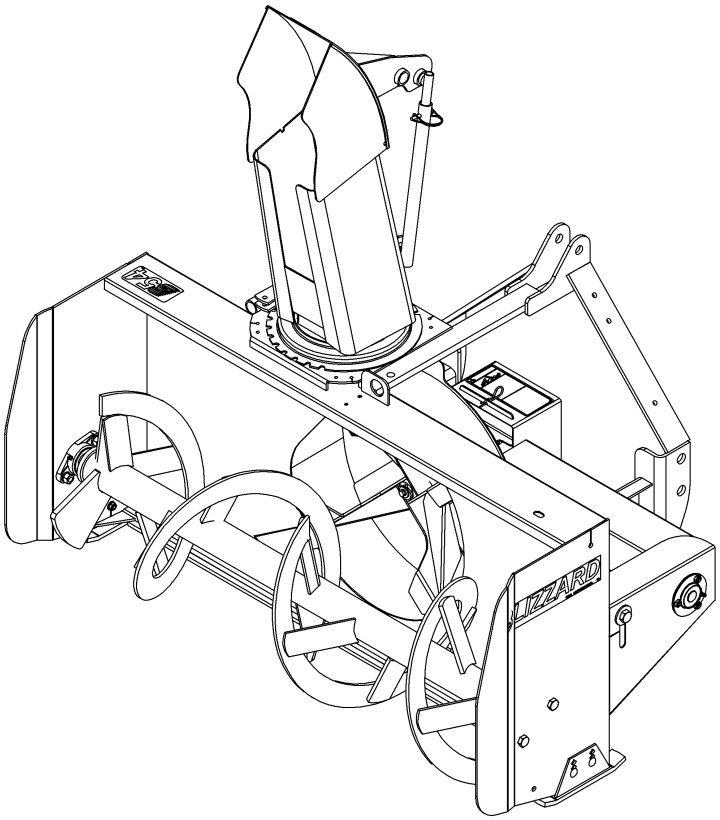

OPERATOR'S AND PARTS MANUAL

SNOWBLOWERS
BLIZZARD B48, B54 & B64 MODELS

SERIAL NO. SJT06090 AND UP

serial number is rather the SJT06019 ; MB14-03-04

INTERTEK
ISO 9001:2000

OM 0351-A
05/09

TABLE OF CONTENT

INTRODUCTION – TO THE PURCHASER 3
SAFETY PRECAUTIONS 4
Before Operation 4
Notice 5
The Snowblower 5
Before Operation 5
Snowblower operation 6
The Tractor 7
General Information 7
Operating the Tractor 8
During Operation 8
Roll-Over Protective Structure (ROPS) 8
Maintenance 9
Transport 10
Storage 10
DECALS 11
ASSEMBLY 12
Snowblower Assembly 12
Chute Installation 12
Installation of Snowblower with Three Point Hitch 12
Installation of Snowblower with Quick Hitch 13
How to Determine Driveline Angles 14
Angles at Each End of Driveline 15
Determining Driveline Length 15
Driveline Installation 17
Removing the Snowblower from the Tractor 18

TABLE OF CONTENT

OPERATION 20
General Preparation 20
Operating Controls 20
Work and Travel Speed 20
Raising and Lowering the Snowblower 20
Drive Shaft Operation 20
Reduction Chain Tension Adjustment 20
Skid Shoe Adjustment 20
Manual Deflector Adjustment 20
Snow Removal Methods 21
MAINTENANCE 22
Maintenance 22
Shearbolts 22
Driveline 22
Lubrication 23
Driveline – Troubleshooting 24
PARTS 27
Introduction 27
Snowblower - Blizzard B48 28
Gearbox (4500039) 31
Driveline (4700100) 32
WARRANTY 33
TORQUE SPECIFICATION TABLE 34

INTRODUCTION

TO THE PURCHASER

All products are designed to give safe, dependable service if they are operated and maintained according to instructions. **Read and understand this manual before operation.**

This manual has been prepared to assist the owner and operators in the safe operation and suitable maintenance of the equipment. The information was applicable to products at the time of manufacture and does not include modifications made afterwards.

Read and understand this operator's manual before attempting to put equipment into service. Familiarize yourself with the operating instructions and all the safety recommendations contained in this manual and those labeled on the equipment and on the tractor. Follow the safety recommendations and make sure that those with whom you work follow them.

Illustrations

The illustrations may not necessarily reproduce the full detail and the exact shape of the parts or depict the actual models, but are intended for reference only.

Direction Reference

All references to right and left, forward or rearward, are from the operator's seat, facing the steering wheel.

To assist your dealer in handling your needs, please record hereafter the model number and serial number of your equipment and tractor. It is also advisable to supply them to your insurance company. It will be helpful in the event that an equipment or tractor is lost or stolen.

	TRACTOR	IMPLEMENT
MODEL:		
SERIAL NUMBER:		
DATE OF PURCHASE:		
DEALER NAME:		

SAFETY PRECAUTIONS

SAFETY FIRST

This symbol, the industry's "Safety Alert Symbol", is used throughout this manual and on labels on the machine itself to warn of the possibility of personal injury. Read these instructions carefully. It is essential that you read the instructions and safety regulations before you attempt to assemble or use this unit.

DANGER : Indicates an immediate hazardous situation which, if not avoided, will result in death or serious injury.

WARNING : Indicates a potentially hazardous situation which, if not avoided, could result in death or serious injury.

CAUTION : Indicates a potentially hazardous situation which, if not avoided, may result in minor or moderate injury.

IMPORTANT : Indicates that equipment or property damage could result if instructions are not followed.

NOTE : Gives helpful information.

All products are designed to give safe, dependable service if they are operated and maintained according to instructions. **Read and understand this manual before operation**. It is the owner's responsibility to be certain anyone operating this product reads this manual, and all other applicable manuals, to become familiar with this equipment and all safety precautions. Failure to do so could result in serious personal injury or equipment damage. If you have any questions, consult your dealer.

BEFORE OPERATION

Children

Tragic accidents can occur if the operator is not alert to the presence of children. Children are generally attracted to machines and the work being done. Never assume children will remain where you last saw them.

1. Keep children out of the operating area and under the watchful eye of another responsible adult.
2. Be alert and turn machine off if children enter the work area.
3. Before and when backing, look behind for small children.
4. Never carry children while operating the machine. They may fall off and be seriously injured or interfere with the safe operation of the machine.
5. Never allow children to play on the machine or attachment even when they are turned off.
6. Never allow children to operate the machine even under adult supervision.
7. Use extra care when approaching blind corners, shrubs, trees, or other obstructions that might hide children from sight.

NOTICE

A safe operator is the best assurance against accidents. All operators, no matter how experienced they may be, should read this operator's manual and all other related manuals before attempting to operate the equipment. Please read the following section and pay particular attention to all safety recommendations contained in this manual and those labeled on the equipment and on the tractor.

THE SNOWBLOWER

Before Operation

1. Read and understand this operator's manual and tractor operator's manual. Know how to operate all controls and how to stop the unit and disengage the controls quickly.
2. Never wear loose, torn, or bulky clothing around the tractor and the snowblower. It may catch on moving parts or controls, causing injury.
3. Before and during the snow season, thoroughly inspect the area where the equipment is to be used and remove all objects that may be thrown or cause damage to the equipment.
4. Set transmission to neutral and disengage clutch, if equipped, before starting the engine.
5. Do not operate equipment in wintertime without wearing adequate winter garments and protective clothing.
6. Never attempt to make any adjustments while engine is running. Read this manual carefully to acquaint yourself with the equipment as well as the tractor operator's manual. Working with unfamiliar equipment can lead to accidents. Be thoroughly familiar with the controls and proper use of the equipment.
7. Keep all safety guards in place and verify hardware for proper tightening.
8. Check for moving parts excessive wear regularly. Replace worn parts with genuine parts.
9. Replace all missing, illegible, or damaged safety and warning decals. See list of decals in operator's manual.
10. Keep safety decals clean of dirt and grime.
11. Do not modify or alter this equipment or any of its components, or any equipment function without first consulting your dealer.
12. Use of rear counterweights is recommended. Weights provide the necessary balance to improve stability, traction and steering. Use only those recommended by your dealer.

Snowblower Operation

1. Before leaving the tractor unattended, take all possible precautions. Park the tractor/snowblower on level ground, place the transmission in neutral, set the parking brake, disengage the PTO, lower the equipment to the ground, place all levers including auxiliary control levers in neutral, shut off the engine and remove the ignition key.
2. Before starting the tractor/ snowblower, remove any ice that has accumulated in the auger/fan.
3. Prior to operation, clear work area of all objects that can be picked up and thrown. Mark all curbs, pipes, etc. that cannot be moved.
4. Be sure the PTO switch/lever is in OFF position before starting engine.
5. Exercise extreme caution when operating on or crossing a gravel drive, walks, or roads. Stay alert for hidden hazards or traffic.
6. Do not carry passengers.
7. Adjust collector-housing height to clear gravel or crushed rock surface.
8. Keep clear of rotating parts. Do not put hands or feet under, or into snowblower with engine running.
9. Park the tractor/snowblower on level ground, place the transmission in neutral, set the parking brake, disengage the PTO, lower the equipment to the ground, place all control levers in neutral, shut off the engine, remove the ignition key and allow the rotating parts to stop BEFORE unclogging the collector/fan housing or chute, and making any repairs, adjustments or inspections. Use only a 36" long piece of wood to unclog blower.
10. If the snowblower starts to vibrate abnormally, disengage the PTO, stop the engine immediately and check for cause. Excessive vibration is generally a sign of trouble.
11. Do not run the engine indoors except when starting engine and transporting attachment in or out of building. Carbon monoxide gas is colorless, odorless and deadly.
12. Do not attempt to operate on steep slopes. If operating on slopes is necessary, exercise extreme caution when changing direction.
13. Never operate snowblower without guards, and other safety protective devices in place.
14. Keep clear of chute discharge. This chute has the capability of throwing objects at far distances.
15. Never operate snowblower near glass enclosures, automobiles, window wells, embankments, etc., without proper adjustment of snow discharge angle.
16. Never operate machine at high transport speeds on a slippery surface.
17. Use extra caution when backing up.
18. Do not direct discharge at bystanders or animals. Ejected objects may cause injury.
19. Disengage power to auger/fan when transporting or when not in use.
20. Never operate the snowblower without good visibility and lighting.
21. Prolonged exposure to loud noise can cause impairment or loss of hearing. Wear a suitable hearing protective device such as earmuffs or earplugs to protect against objectionable or uncomfortable noises.
22. Never allow anyone near the work area.

THE TRACTOR

General Information

1. Read the operator's manual carefully before using tractor. Lack of operating knowledge can lead to accidents.
2. Do not permit anyone but the operator to ride on the tractor. There is no safe place for passengers.

Operating the Tractor

1. Never run the tractor engine in a closed building without adequate ventilation, as the exhaust fumes are very dangerous.
2. Adopt safe driving practice: Keep the brake pedals latched together at all times unless independent braking is required. Never use independent braking during transport.
3. Always drive at a safe speed relative to local conditions and ensure that your speed is low enough for an emergency stop to be safe and secure.
4. Reduce speed prior to turns to avoid the risk of overturning. Keep speed to a minimum.
5. Always keep the tractor in gear to provide engine braking when going downhill. Do not coast.
6. Never allow an open flame near the fuel tank or battery.
7. Make sure the PTO shield is installed when using the equipment and always replace the PTO shield if damaged.
8. Park the tractor/snowblower on level ground, place the transmission in neutral, set the parking brake, disengage the PTO, lower the equipment to the ground, place all levers including auxiliary control levers in neutral, shut off the engine and remove the ignition key BEFORE leaving the tractor.
9. Never park the tractor on a steep slope.
10. Do not attempt to operate on steep slopes. Avoid sudden uphill turns on steep slopes.
11. Use of rear counterweights for better traction and stability is recommended.
12. Handle fuel with care, as it is highly flammable.
13. Use approved fuel container.
14. Never add fuel to a running engine or a hot engine.
15. Fill fuel tank outdoors with extreme care. Never fill fuel tank indoors. Replace fuel cap securely and wipe up spilled fuel.
16. Never allow anyone to operate the snowblower until they have read the manual completely and are thoroughly familiar with basic tractor and snowblower operation.
17. Make sure the tractor is counterweighted as recommended by your dealer. Weights provide the necessary balance to improve stability, traction and steering.
18. Always make sure all snowblower components are properly installed and securely fastened BEFORE operation.
19. Never attempt to start the engine and/or engage snowblower drive while standing beside the tractor.
20. Always start the engine from the operator's seat with all the transmission lever(s) and snowblower drive lever in neutral.
21. DO NOT bypass the safety system by shorting across the terminals of the starter motor to start the engine. This may cause the tractor to move suddenly.
22. If the safety start system does not work, consult your dealer immediately.

During Operation

1. Do not allow passengers on the tractor/snowblower at any time. There is no safe place for passengers on this equipment. The operator MUST sit in the tractor seat.
2. Eye and hearing protection is recommended when operating the snowblower.
3. Operate only during daylight hours, or when the area is well lit with bright artificial light.
4. Park the tractor/snowblower on level ground, place the transmission in neutral, set the parking brake, disengage the PTO, lower the equipment to the ground, place all control levers in neutral, shut off the engine and remove the ignition key BEFORE leaving the operator's seat.
5. Inspect the snowblower after striking any foreign object to assure that all snowblower parts are safe and secure and not damaged.
6. Be especially observant of the operating area and terrain. Watch for holes, rocks, or other hidden hazards. ALWAYS inspect the area prior to blowing.
7. DO NOT blow near the edge of drop-offs or banks.
8. DO NOT blow on steep slopes as overturn may result.
9. Operate up and down (not across) intermediate slopes. Avoid sudden starts and stops.
10. Drive tractor backwards up steeper slopes with blower off. Then blow as you travel down the slope.
11. Slow down before you change directions on any slope.
12. Use wheel weights on your tractor to increase stability on slopes.
13. Never stand alongside of the unit while the engine is running.

Roll-Over Protective Structure (ROPS)

1. DO NOT weld, drill or alter the ROPS. Damaged ROPS must not be straightened or used. If damage does occur, consult your dealer.
2. If the ROPS is lowered or removed from the tractor for any reason, it must be erected and/or refitted immediately. Original bolts or equivalent replacements must be used and tightened to the correct torque.
3. Your dealer does not recommend usage of tractor with ROPS removed.
4. If a fold-down ROPS is used, the ROPS can be folded down for storage, but it must be pinned in the upright position prior to operation.
5. Seat belt usage: With ROPS installed on the tractor it is imperative that the seat belt be installed, used and correctly adjusted, at all times. DO NOT use a seat belt if operating without ROPS.
6. Keep all shields and covers in place. All tractor and equipment shields and covers must be correctly installed at all times. When necessary to remove these, they must be reinstalled immediately.
7. Keep clear of all rotating driveline component. Be especially observant of implement areas of discharge, intake or other mechanical motion.
8. Securely lock equipment drive shaft. Check that all tractor and equipment drivelines are in good working order. Equipment drive shaft coupler must securely lock to and be retained by annular groove on tractor drive shaft.
9. Additional safety equipment: A fire extinguisher and first aid kit should be kept readily accessible. These are available through your dealer.

MAINTENANCE

ALWAYS USE GENUINE PARTS WHEN REPLACEMENT PARTS ARE REQUIRED

1. Keep the tractor and snowblower properly maintained.
2. Park the tractor/snowblower on level ground, place the transmission in neutral, set the parking brake, disengage the PTO, lower the equipment to the ground, place all control levers in neutral, shut off the engine and remove the ignition key and allow the rotating parts to stop BEFORE making any snowblower adjustments.
3. To avoid injury, do not adjust, unclog or service the snowblower with the tractor engine running. Make sure rotating components have completely stopped before leaving the operator's seat.
4. Keep the tractor/snowblower clean. Snow and ice build-up can lead to malfunction or personal injury from thawing and refreezing in garage.
5. Always wear eye protection when cleaning or servicing the snowblower.
6. Service the unit in safety: DO NOT service the tractor while the engine is running or hot, or if the unit is in motion. Always lower snowblower to the ground. If necessary to service unit with blower raised, securely support with stands or suitable blocking before working underneath. Do not rely on hydraulically supported devices for your safety. They can settle suddenly, leak down, or be accidentally lowered.
7. Do not attempt to service machine, clear obstructions or unplug blockages with the engine running. Always shut off engine and allow all motion to cease.
8. The manufacturer will not claim responsibility for fitment of unapproved parts and/or accessories and any damages as a result of their use.
9. Make sure all shields and guards are securely in place following all service, cleaning, or repair work.
10. Do not modify or alter this equipment or any of its components or operating functions. If you have questions concerning modifications, consult with your dealer.
11. Do not operate a unit which is defective or has missing parts. Make sure that all recommended maintenance procedures are completed before operating the unit.
12. Check all controls regularly and adjust where necessary. Make sure that the brakes are evenly adjusted.
13. Periodically check all nuts and bolts for tightness, especially wheel hub and rim nuts.
14. Snowblower fan and auger must be checked for tightness. Remove any twine, wire, etc. that may have wrapped on the fan or the auger.
15. To avoid serious personal injury: Escaping hydraulic/diesel fluid under pressure can penetrate the skin causing serious injury. Do not use your hands to check for leaks. Use a piece of cardboard or paper to search for leaks.
16. Stop engine and relieve pressure before connecting or disconnecting lines. Tighten all connections before starting engine or pressurizing lines.

TRANSPORTING

1. Transporting on public roadway: When driving the tractor and equipment on the road or highway under 25 mph, at night or during the day, use flashing amber warning lights and the Slow Moving Vehicle ("SMV") identification emblem.
2. Check local traffic codes that may apply to unit usage on public roads and highways in your area. The use of flashing amber lights is acceptable in most localities. However, some localities may prohibit their use.
3. Always disengage equipment drive prior to transporting unit.

STORAGE

Before storing the snowblower, certain precautions should be taken to protect it from deterioration.

1. Clean the snowblower thoroughly.
2. Make all the necessary repairs.
3. Replace all safety signs that are damaged, lost, or otherwise become illegible. If a part to be replaced has a sign on it, obtain a new safety sign from your dealer and install it in the same place as on the removed part.
4. Repaint all parts from which paint has worn or peeled.
5. Lubricate the snowblower as instructed under **"Lubrication"** section.
6. When the snowblower is dry, oil all moving parts. Apply oil liberally to all surfaces to protect against rust.
7. Store in a dry place.

DECALS

Replace immediately if damaged.

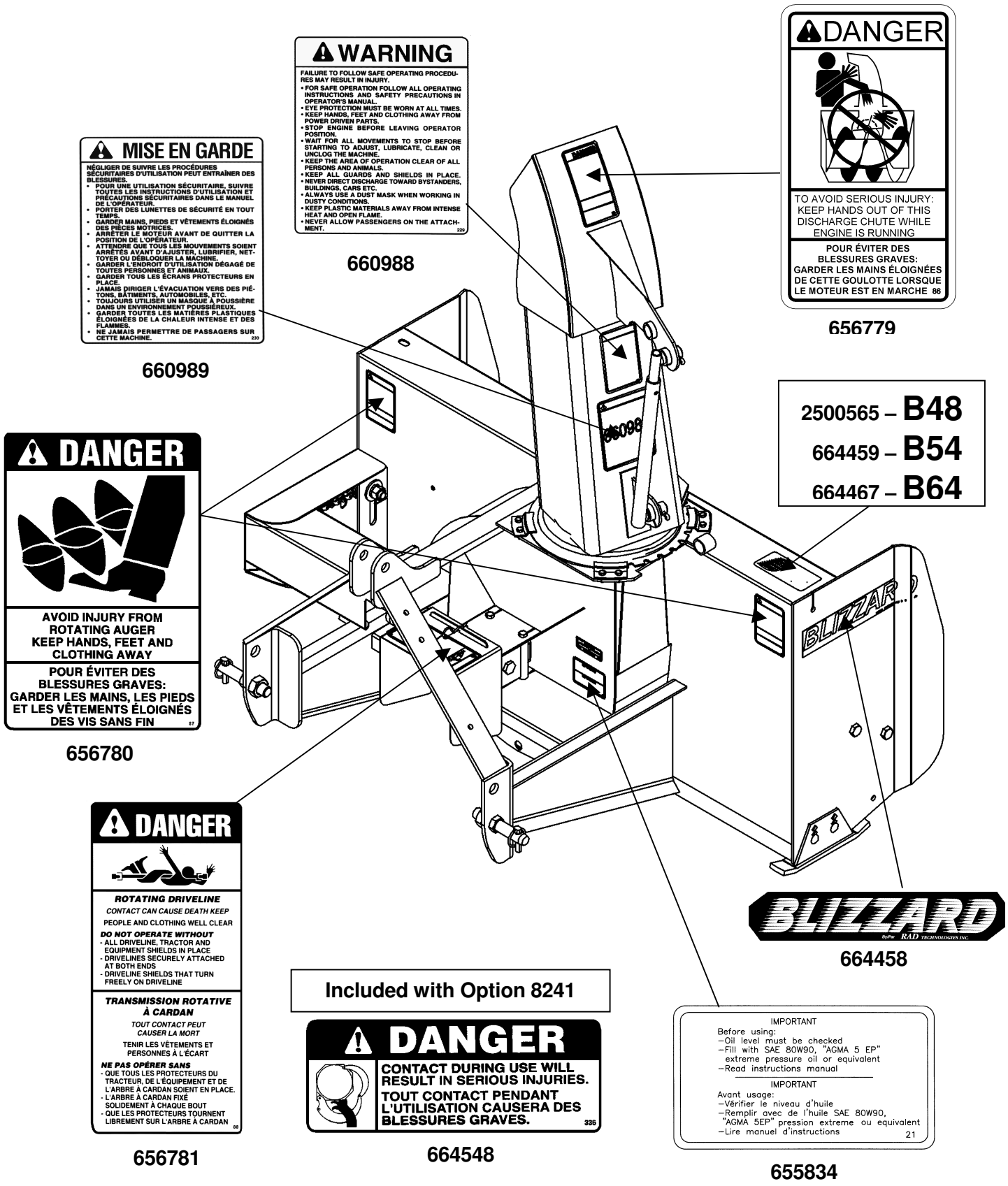

SNOWBLOWER ASSEMBLY

The snowblower is assembled at the factory, however, parts contained in the hardware bag must be assembled. Use the present manual and lay out all parts for assembly. Separate bolts and nuts into various sizes. After assembly, torque all the bolts according to the Torque Specification Table enclosed at the end of the manual.

Chute Installation

Install chute according to the instructions supplied with the chosen rotation – manual or hydraulic.

Installation of Snowblower with Three Point Hitch

(Figure 1)

1. Install the two cat. 1 pins (item 1) on the right and left snowblower hitches in the lower holes as shown on figure.
2. Attach tractor lower links (item 2) to the hitch pins (item 1) and secure with the linchpins (item 3).
3. Attach the tractor upper link (item 4) between the upper attaching plates (item 6) using the tractor pin and linchpin (item 5 – not included).
4. Adjust the snowblower using the tractor upper link so that the snowblower operates parallel to the ground.
5. Set the tractor anti-sway turnbuckles so the snowblower does not sway. Be sure there is no contact with the tires.

CAUTION

Before connecting snowblower driveline to tractor drive shaft, make sure driveline is not too long in raised, lowered and middle position. If the driveline is too long it must be shortened, to avoid damaged to tractor. See pages 14 to 16 for instructions.

6. Connect driveline to tractor drive P.T.O. making sure that the driveline is properly engaged.

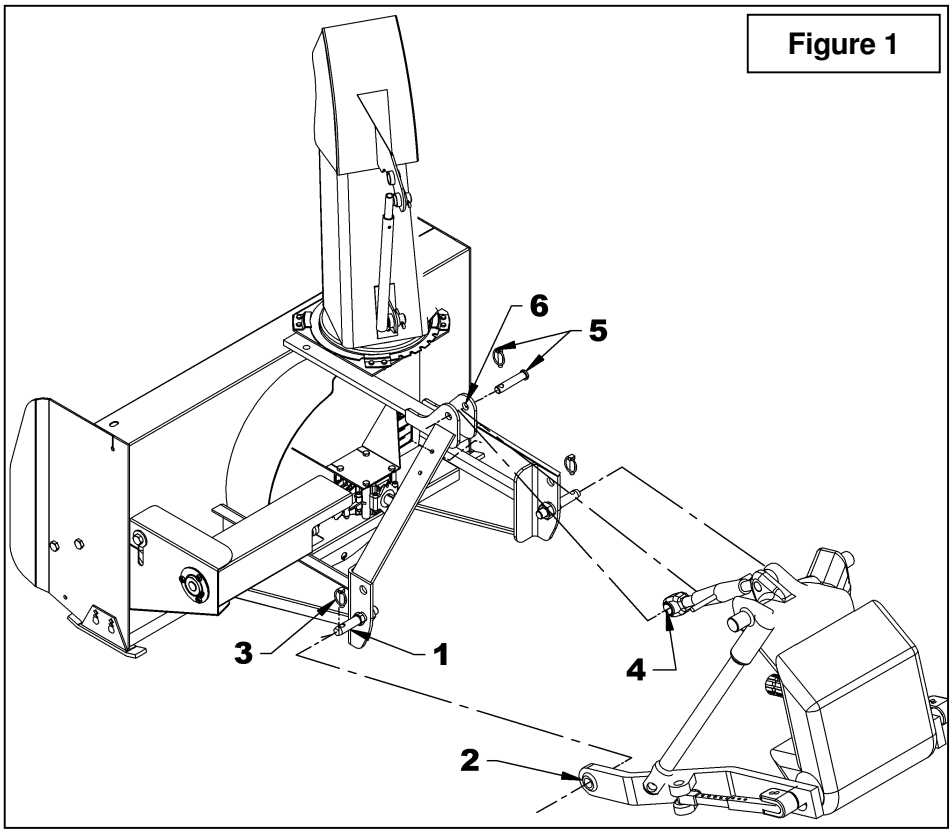

Figure 1

Installation of Snowblower with Quick Hitch

(Figure 2)

1. Install the two cat. 1 pins (item 2) on the right and left snowblower hitches in the upper holes leaving 3 1/4" between the jam nut and the end of the pin as shown on figure.
2. Insert the two 2 1/8" lg bushings (item 3, not included) on each pin and secure in place and lock in place with the two 7/16" linchpins (item 4).
3. Insert a 1 7/8" lg bushing (item 5, not included) between the upper attaching plates and lock in place with the tractor hitch pin and a 7/16" linchpin (items 6-7 not included).

CAUTION

Before connecting snowblower driveline to tractor drive shaft, make sure driveline is not too long in raised, lowered and middle position. If the driveline is too long it must be shortened, to avoid damaged to tractor. See pages 14 to 16 for instructions.

4. Connect driveline to tractor drive P.T.O. making sure that the driveline is properly engaged.

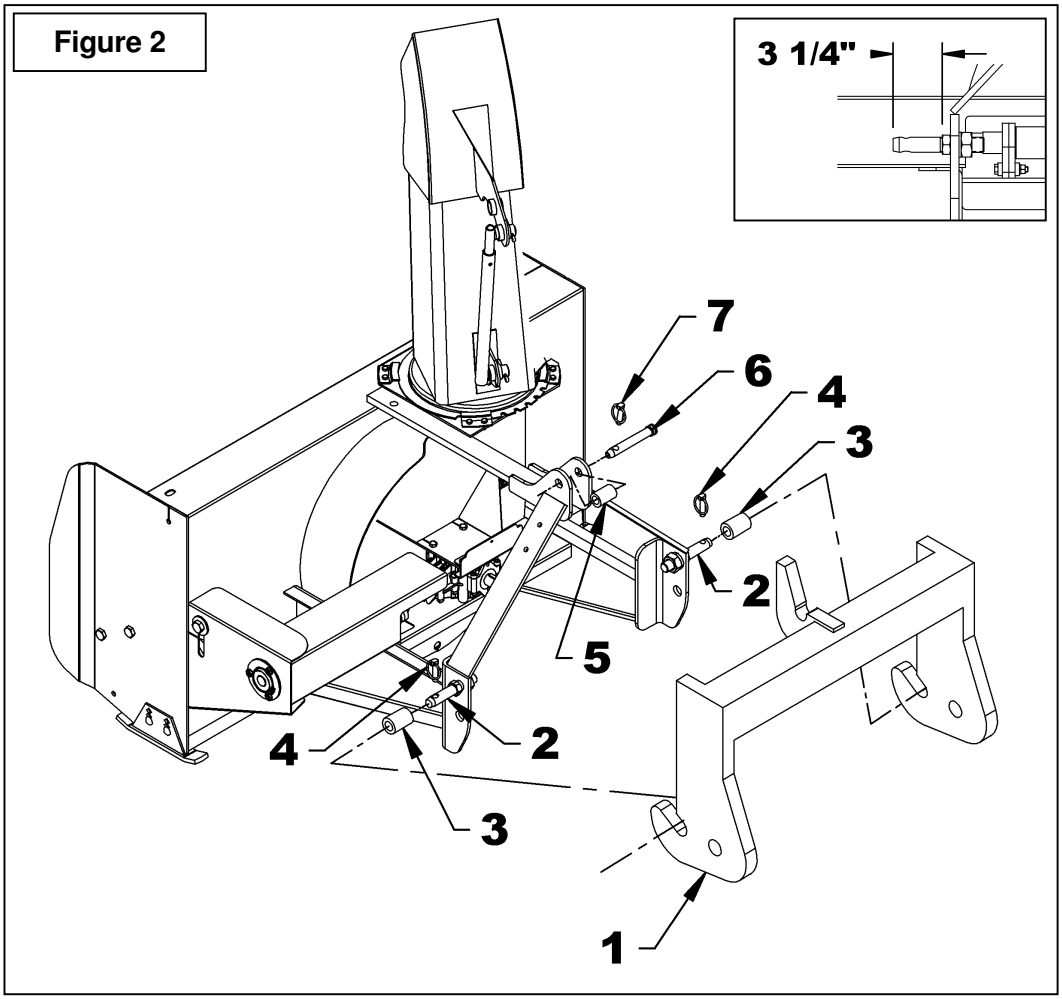

IMPORTANT:

A proper initial installation will give you years of satisfactory service on your equipment. Please read carefully following instructions that have been specially included to help you and ensure you are satisfied with your purchase.

WARNING: Unfortunately, snowblowers will be faced with forgotten or hidden objects under the snow, such as : chain, tires, stones, pieces of wood, etc. In spite of all our efforts, machines are not built to resist all those conditions.

How to Determine Driveline Angles

IMPORTANT: To obtain the proper universal joint angles, it is recommended to adjust the three point hitch at the furthest point from the tractor recommended by the manufacturer

Danger: Tractors Too Big

It is dangerous to use a tractor that is too big and powerful. The tractor will always be able to overload the blower, even if the machine is already at maximum capacity. Furthermore, tractors being very high, the driveline angles will be excessive which means the universal joints will be very vulnerable and the life of the driveline will be dramatically reduced.

The universal joint angle is directly related with the life of driveline. In order to reduce the angle, it is necessary to increase the distance between the snowblower and the tractor.

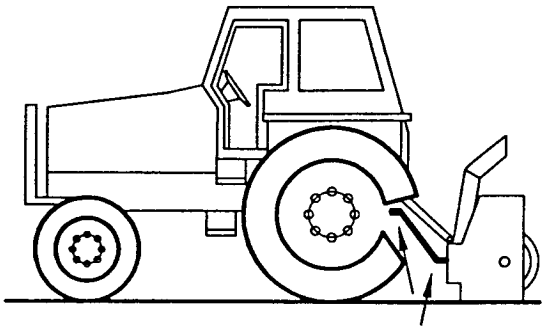

Angles of Driveline Joints Too Large Avoid

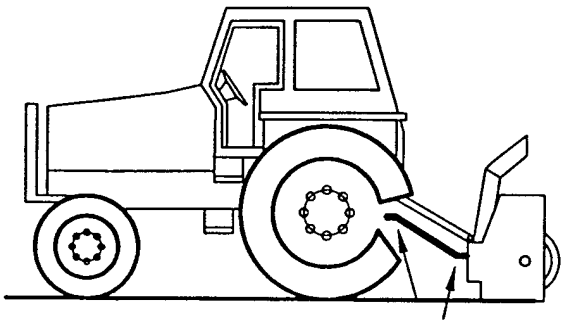

Reasonable Angles of Driveline Joints Acceptable

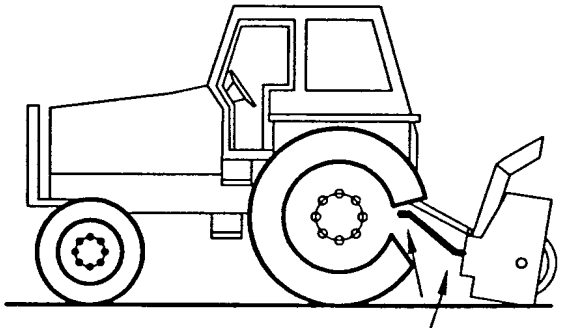

Unequal Angles at Driveline Joints Avoid

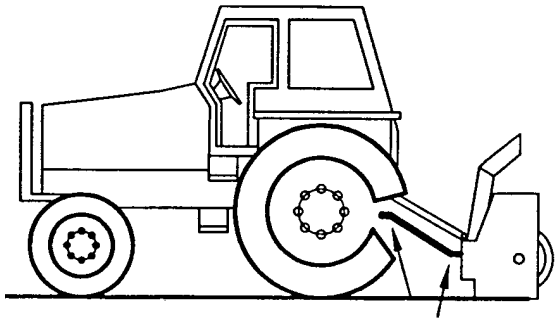

Equal Angles at Driveline Joints Recommended

Angles at Each End of Driveline

A popular habit is to change the snowblower angle in order to obtain a better scraping effect. This practice can become harmful to the driveline since the angle at each end is unequal. This results in a fan speed variation as well as a drastic increase of load on cross and bearings. To be avoided: It is recommended to always keep tractor driveline and snowblower input shaft parallel.

Figure 3

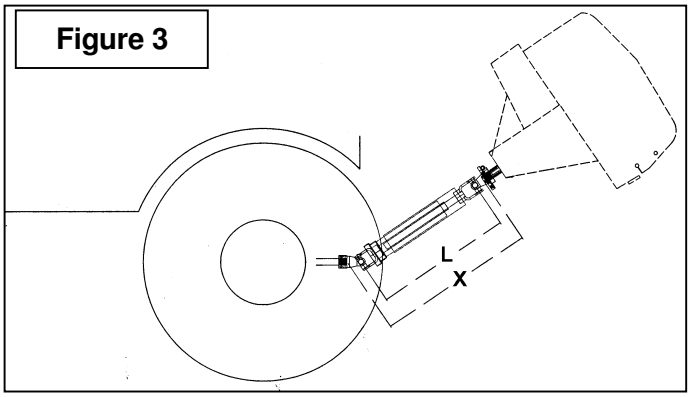

Determining Driveline Length

IMPORTANT: Before using the equipment, make sure the driveline is not too long. At working position, the two half drivelines must intersect each other sufficiently to insure maximum efficiency but there must not be any interference.

1. To determine the **"L"** length for your tractor model first find the **"X"** factor by measuring the horizontal distance between the end of the tractor's drive shaft and the end of the snowblower's driven shaft when the snowblower is in transport position as shown on Figure 3.
2. Choose in the table below the **"Y"** factor according to the tractor category and deduct that number from **"X"** to determine **"L"** which is the center-to-center length between the universal joints.

L = X – Y	
3 PTS HITCH CATEGORY	Y
Cat. 1	4 1/2"
Cat. 2	5 1/2"

NOTE: Before cutting, make sure the two shafts intersect by at least 7 3/4" when in working position that is when the snowblower rests on the ground.

3. Hold the two half-shaft side by side and locate the **"L"** length between the two center-to-center half-shaft universal joints. Mark off the zone to be cut on both halves opposite each half-shaft guard as shown on Figure 4
4. Cut off inner and outer guard tubes as well as the inner and outer telescopic sections.
5. Cut the guard a second time leaving the same distance between the end of the guard and the end of the shaft as existed before. To obtain the proper distance "A" shown on Figure 5, cut the guard according to the following table:

DISTANCE A	
Male PTO	Female PTO
1 3/4"	1 1/4"

6. File down tubes and remove chips.
7. Apply grease to inside of outer telescopic section.

IMPORTANT: Always work with fully guarded shafts only!

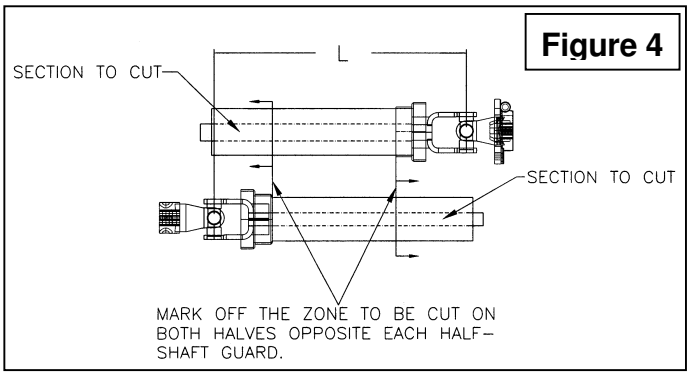

Figure 4

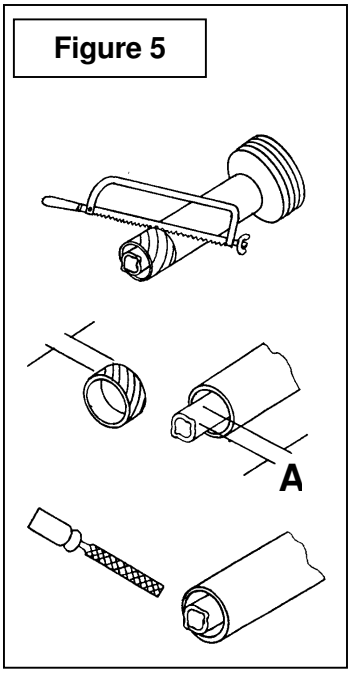

Figure 5

Driveline Installation
(Figure 6)

1. Separate the snowblower from the three point hitch.
2. Remove paint from snowblower gearbox shaft (item 2) and grease driveline sliding surfaces and yoke.
3. Insert the 1/4" x 1/4" x 1 1/4" key (item 1) on the gearbox shaft. Connect the Ø1" driveline yoke to the gearbox shaft (item 2). Secure with a 1/4" NC x 2 1/2" bolt, a 1/4" NC nylon insert locknut and a 1/4" NC x 3/8" setscrew (items 3-4-5). Tighten the bolt according to the ***Torque Specification Table*** on page 34.
4. Attach the safety chain (item 6) over the upper link (item 7) to prevent the guard from spinning.

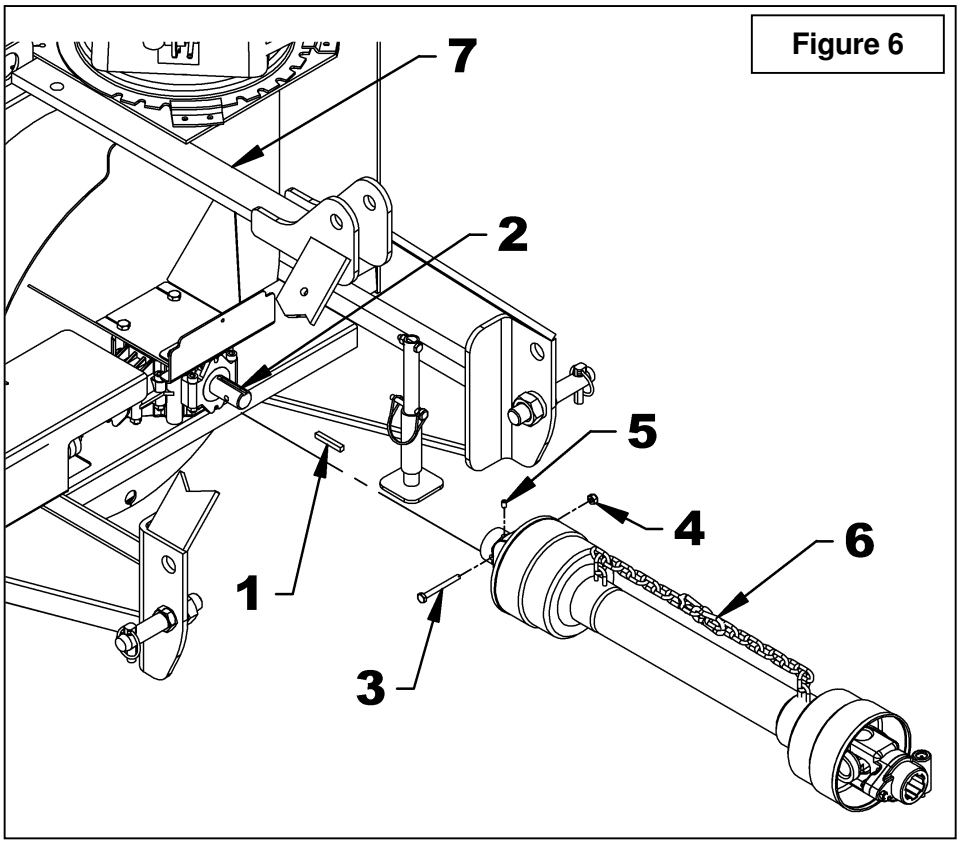

Figure 6

Removing Snowblower from Tractor
(Figures 7-8-9)

Three Point Hitch

1. Set parking brake and turn engine off.
2. **Figure 7:** Remove the wire round lock pin (item 2), lower the parking stand (item 1) completely to the ground to release all the pressure on the three point and reinsert the wire round lock pin in the lower hole (item 3).
3. **Figure 8:** Disconnect the driveline (item 7) from the tractor and attach the safety chain around the upper hitch (item 8).
4. **Figure 8:** Detach tractor upper link (item 4) by removing linchpin and pin (items 6-5).
5. **Figure 8:** Carefully detach lower links (items 2) from hitch pins (item 1) by removing linchpins (items 3), loosen anti-sway turnbuckles and slowly back tractor away from the snowblower.

IMPORTANT: To avoid damages to the snowblower, retorque all bolts after the first 10 hours of operation.

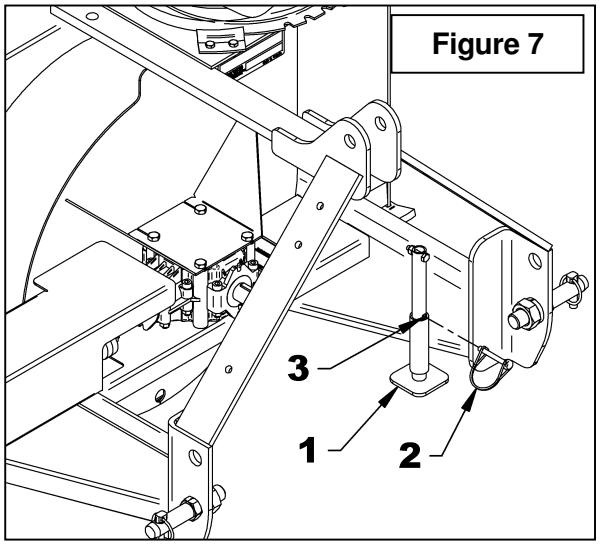

Figure 7

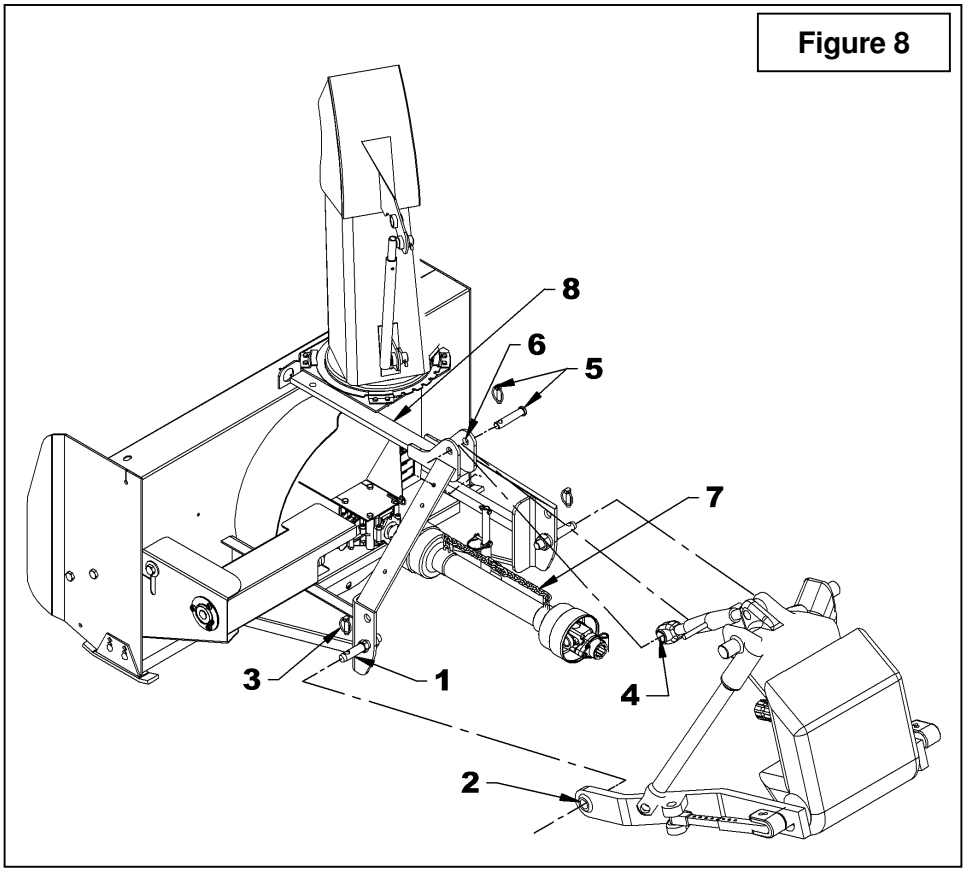

Figure 8

Quick Hitch

1. Set parking brake and turn engine off.
2. **Figure 7:** Remove the wire round lock pin (item 2), lower the parking stand (item 1) and reinsert the wire round lock pin in the lower hole (item 3).
3. **Figure 9:** Disconnect driveline (item 1) from tractor and attach the driveline safety chain (item 2) to the upper hitch (item 3).
4. **Figure 9:** Slowly back the tractor away to release quick hitch from the snowblower.

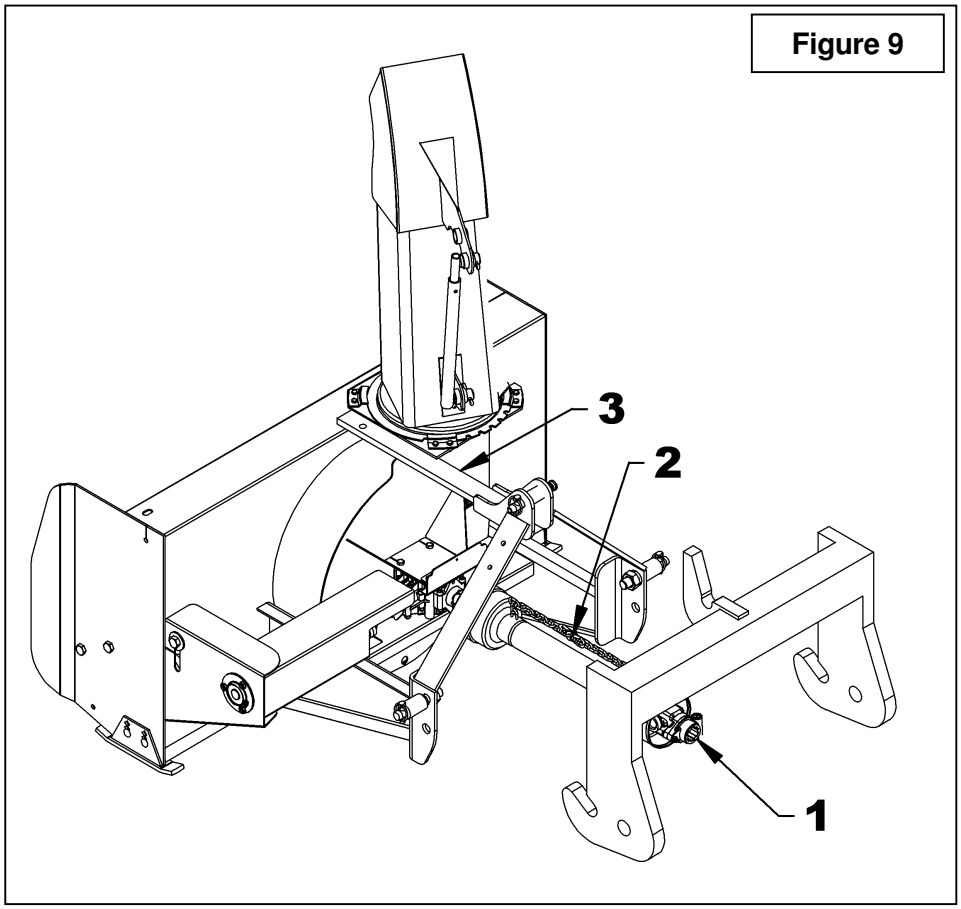

Figure 9

GENERAL PREPARATION

1. Read the operator's manual carefully before using the tractor and snowblower. Be thoroughly familiar with the controls and proper use of the equipment. Know how to stop the unit and disengage the controls quickly.
2. Make sure the snowblower is clear of snow before engaging the driveline.
3. Make sure the auger and fan operate freely.
4. Check the oil level in the worm Gearbox and if necessary, add 80W90 SAE gear oil, AGMA 5EP oil or equivalent.
5. Check the two shear bolts, one on the driving shaft, and the one on the PTO, for proper tightness.
6. Adjust so that the snowblower skid shoes run level.
7. Wear adequate winter outer garments while operating equipment.

OPERATING CONTROLS

Work and Travel Speed

Working ground speed will depend on the depth and density of the snow to be cleared. Normally, ground speed will range from 4 to 7 MPH for light, dry snowfalls 3 to 6 inches, and 1 to 3 MPH for heavy, wet or drifted snow. To transport, disengage the drive shaft and raise the snowblower to full transport height.

Raising and Lowering the Snowblower

Move the three point lever on right hand side of seat down or forward to lower, and up or rearward to raise.

⚠ WARNING

To avoid personal injury, be sure the tractor engine is off, the drive shaft disengaged, and all movement has stopped before making any adjustments.

ADJUSTMENTS

Chain Tension Adjustment
(Figure 10)

The premature wear of the chain may be caused by tension being too tight. It is therefore important not to tighten chain to its maximum.

- To adjust the tension on the drive chain, loosen the bolt (item 1) securing the idler sprocket to the snowblower housing.
- To tighten the chain, lower the bolt. Leave approximately 1/8" deflection in one span of the chain. Retighten securely the bolt holding the idler sprocket.

Skid Shoe Adjustment
(Figure 10)

Adjust the skid shoes so that the snowblower runs level and according to the surface conditions so that stones are not thrown with the snow.

Adjust both skid shoes to the same height to keep the cutting edge level and adjust upwards for smooth surfaces.

Loosen skid shoe bolts (item 2) and adjust according to instructions below, and securely tighten bolts:

Clearance between cutting edge and surface:

- *Paved surface*: Insert bolts in lower hole.
- *Uneven or gravel surface:* Insert bolts according to distance needed: 1/2" - middle hole
  1" - upper hole

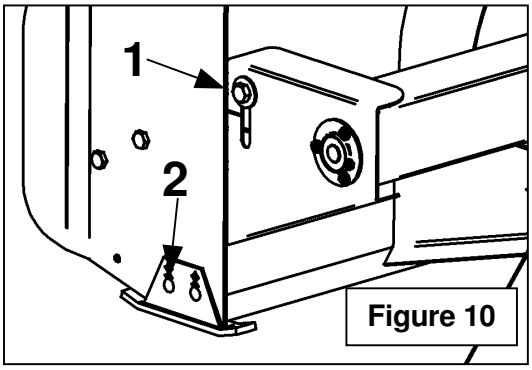

Figure 10

Manual Deflector Adjustment

Set the angle of deflection according to the distance the snow must be thrown. To set the deflector angle, remove the adjusting pipe hairpin and adjust the adjusting rod to the desired deflector angle. Secure with the adjusting pipe hairpin.

SNOW REMOVAL METHODS

When removing snow, do not use the snowblower as a dozer blade to push snow. Let the snowblower work its way through deep drifts. If the speed of your tractor is too fast, the snowblower may become overloaded and clog. For best results, raise the snowblower and remove a top layer of snow. A second pass with the snowblower will remove the remaining snow.

IMPORTANT: Use full RPM power when removing wet, sticky snow. Low RPM power will tend to clog the chute.

⚠ WARNING

Do not use hands or feet to unclog chute. Do not attempt to clear clogged chute of snow while tractor engine is running. If the chute clogs, disengage the drive shaft, shut off the tractor engine, remove the ignition key, wait for all movement to stop, and then clear the snow from the chute.

A definite pattern of operation is required to thoroughly clean the snow area. These patterns will avoid throwing snow in unwanted places as well as eliminating a second removal of snow

PATTERN 1

DISCHARGE SNOW BOTH SIDES

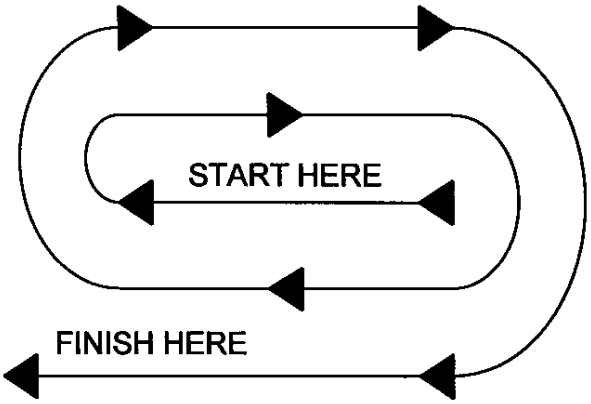

DISCHARGE SNOW BOTH SIDES

Where it is possible to throw the snow to the left and right (above), as on a long driveway, it is advantageous to start in the middle. Plow from one end to the other, throwing snow to both sides without changing the direction of the discharge guide

PATTERN 2

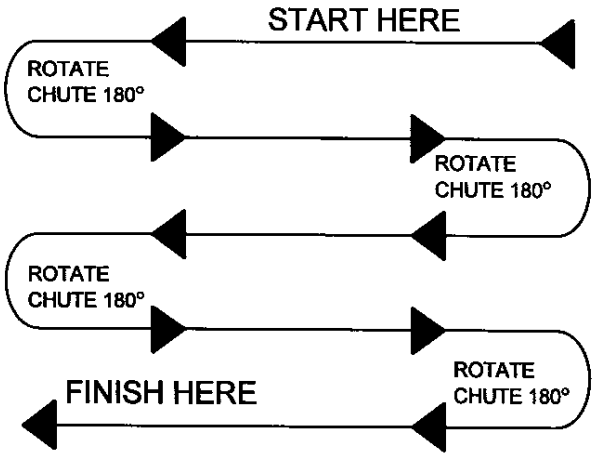

DISCHARGE SNOW THIS SIDE ONLY

If the snow can only be thrown to one side of the driveway or sidewalk (above), start on the opposite side. At the end of the first pass, rotate the discharge guide 180 degrees for the return pass. At the end of each succeeding pass, rotate the discharge guide 180 degrees to maintain direction of throw in the same area.

MAINTENANCE

Shearbolts

Check the shearbolts indicated on the figure below at frequent intervals for proper tightness to be sure the blower is in safe working condition. If the shearbolts need replacement, use the following parts only:

Drive shaft:

Shearbolt hex. 1/4" NC x 1 3/4" gr.5, including 1/4" NC nylon insert locknut. Part # 663837

Driveline:

Bolt M6 x 1.00 x 40mm long gr.8.8 PTD and nut. Part # 4700105.

WARNING

Provide adequate blocking before working under the snowblower when in the raised position.

Driveline

IMPORTANT: When the snowblower is not used for more than two weeks, perform driveline maintenance and always store it in a dry place, away from bad weather conditions.

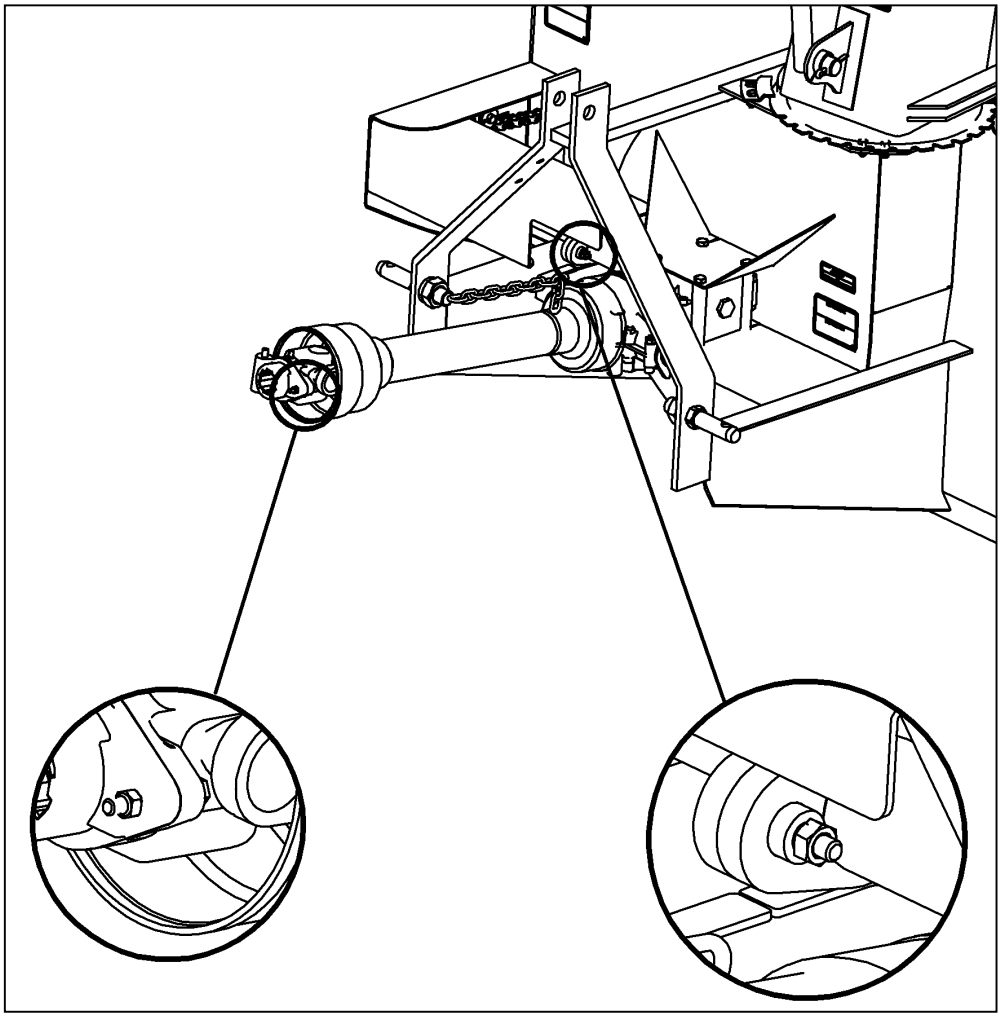

LUBRICATION

Use oil or a grease gun and lubricate as follows:

DESCRIPTION	INTERVAL	LUBRICATION REQUIRED
Driveline	8 hours	Grease each universal joint. Separate the sliding parts and cover each one of them with grease
	16 hours	Oil the connections
Chain	4 hours and after each operation	Lubricate with chain lube
Drive Shaft	24 hours of operation	Grease fitting on shear plate
Gearbox	Every month	Check oil level. If needed, add AGMA 5EP extreme pressure oil, SAE 80W90 gear oil or equivalent.
	Once a year	Replace oil
Bearing	24 hours of operation	Grease each auger bearing

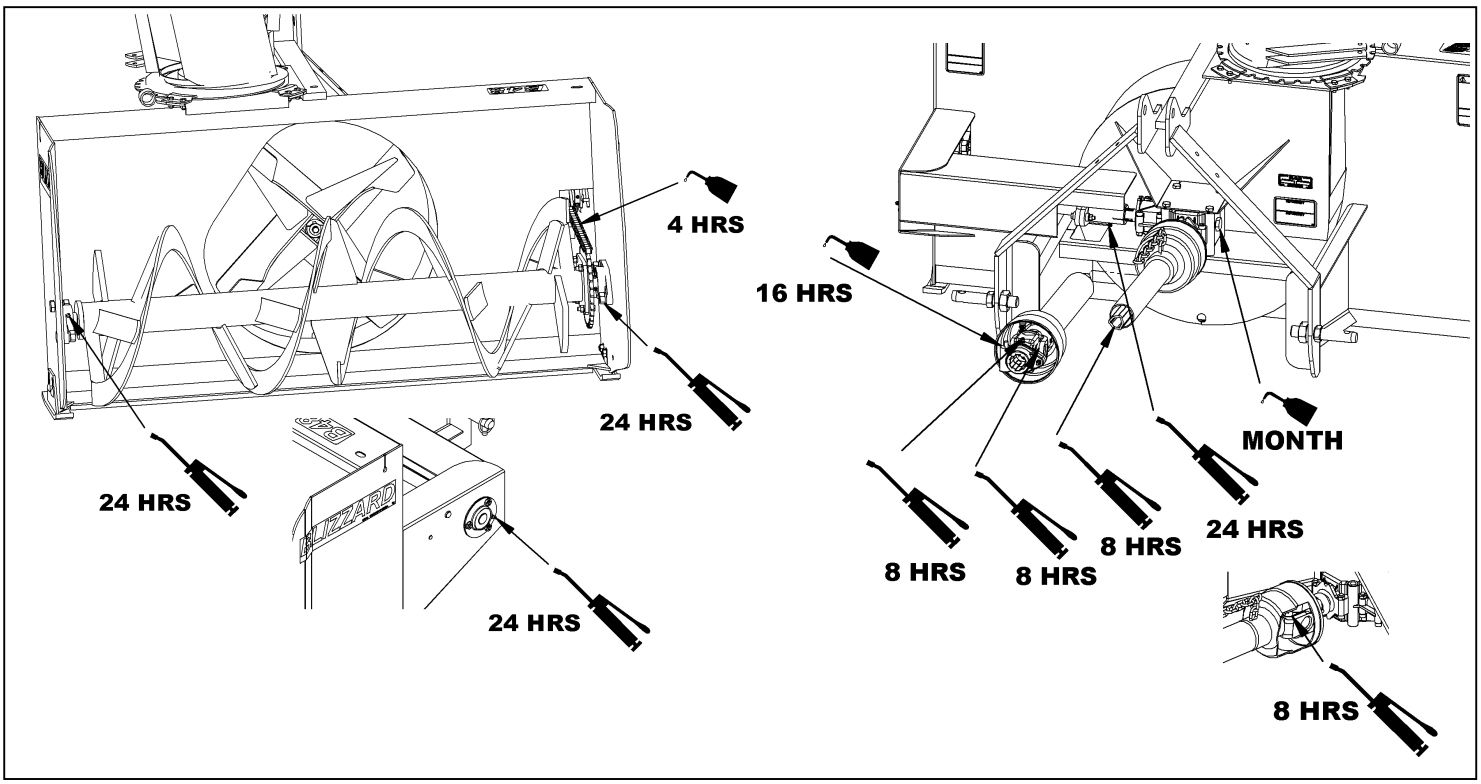

DRIVELINE TROUBLESHOOTING

	AVOIDABLE DAMAGES	POSSIBLE CAUSES	CORRECTIVE ACTIONS
QUICK-DISCONNECT YOKE 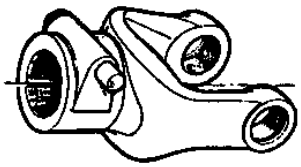	• Quick-disconnect pin tight or completely seized. • Quick-disconnect pin damaged (broken or bent) • Quick-disconnect pin damaged in the locking portion 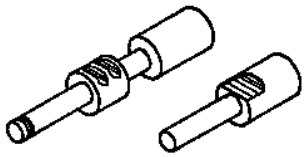	• Quick-disconnect pin dirty (insufficient maintenance). • Quick-disconnect pin defective (forced engagement, incorrect handling) • Excessive shaft length. • Axial loads too high.	• Clean, oil and follow service instructions. • Replace quick-disconnect pin. • Shorten shaft length (cut both telescopic tubes as well as shield and remove burrs). • Replace quick-disconnect pin. • Clean and grease telescopic tubes, and replace both tubes, if necessary. • Replace quick-disconnect pin.

Note: Quick-disconnect pins must be cleaned and greased every 16 hours.

	AVOIDABLE DAMAGES	POSSIBLE CAUSES	CORRECTIVE ACTIONS
YOKE 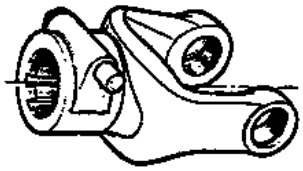	• Yoke ears deformation 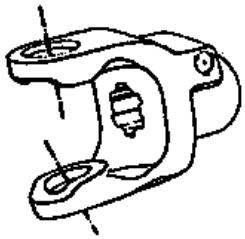 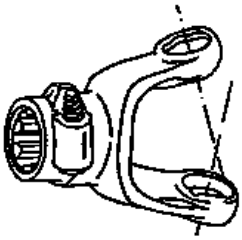	• Excessive shaft length. • Axial loads too high. • Excessive working angle and torque.	• Shorten shaft length (cut both telescopic tubes as well as shields and remove burrs). • Replace defective yokes. • Clean and grease telescopic tubes, and replace both tubes, if necessary. • Replace defective yokes. • Verify compatibility between shaft and working conditions (torque vs. angle). • Disengage tractor driveline during cornering or when lifting or lowering the implement. • Change to a larger driveline size. • Replace defective yokes.
	• Yoke ears distorted. 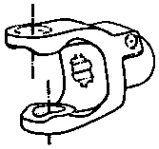	• Overload caused by high starting and peak torques.	• Engage driveline more carefully. • Use appropriate safety devices. • Replace defective yokes.
	• Yoke ears worn or pounded. 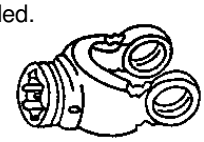	• Excessive working angle.	• Avoid excessive working angle. • Disengage tractor driveline during cornering. • Replace defective yokes.

	AVOIDABLE DAMAGES	POSSIBLE CAUSES	CORRECTIVE ACTIONS
CROSS KIT 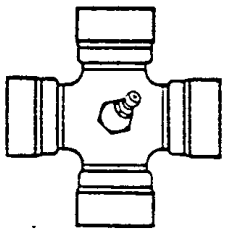	• Cross arms broken. 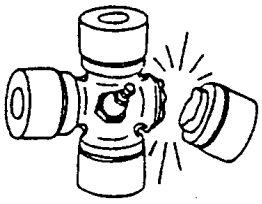	• Extreme torque peak or shock load. • Axial loads too high.	• Use appropriate safety device. • Change to a larger driveline size. • Shorten driveline shaft. • Replace defective cross bearings.
	• Bearing caps turning in their cross journal. • Overheated bearing caps.	• Excessive continuous torque and/or excessive working angle. • Inadequate greasing.	• Verify compatibility between shaft and working conditions. • Carefully follow greasing instructions. • Replace defective cross bearings.
	• Accelerated wear of cross kit. 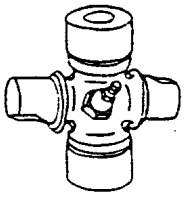	• Excessive continuous torque and/or excessive working angle. • Inadequate greasing.	• Verify compatibility between shaft and working conditions. • Carefully follow greasing instructions. • Replace defective cross bearings.

Note: Cross bearings must be greased every 8 working hours.

	AVOIDABLE DAMAGES	POSSIBLE CAUSES	CORRECTIVE ACTIONS
TELESCOPIC TUBES 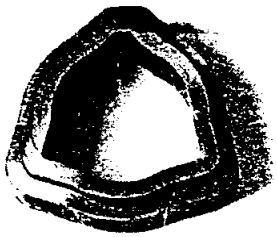	• Telescopic tubes failure or twisting. 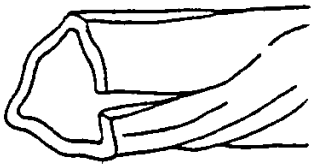	• Extreme torque peak or shock load. • Short tube engagement.	• Use appropriate safety device. • Change to a larger driveline size. • Replace the driveline drive shaft with one having adequate length. • Replace defective tubes.
	• Accelerated wear of telescopic tubes.	• Extreme load when sliding. • Short tube engagement. • Inadequate greasing. • Dirt	• Change to a driveline with rilsan coated inner tube. • Replace the driveline with one having adequate length. • Carefully follow greasing instructions. • Replace defective tubes.

Note: Telescopic tubes must be cleaned and greased every 8 working hours.

	AVOIDABLE DAMAGES	POSSIBLE CAUSES	CORRECTIVE ACTIONS
SHIELD 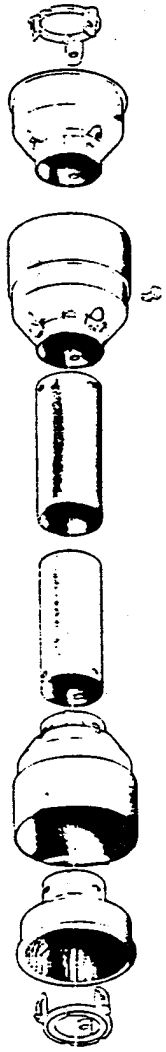	• Excessive wear of shield bearings. 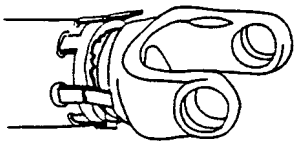	• Insufficient lubrication. • Incorrect chain mounting. • Shield interfering with implement.	• Follow lubrication instructions. • Mount chain to allow maximum angularity. • Avoid contact of the shields with fixed parts of the machine or tractor. • Replace shield bearings.
	• Chain moving or failure. 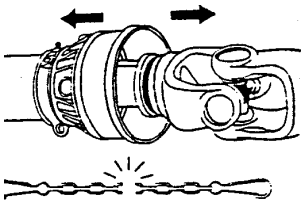	▪ Shield interfering with implement. ▪ Incorrect chain mounting.	• Avoid contact of the shields with fixed parts of the machine or tractor. • Mount chain to allow maximum angularity. • Replace defective parts.
	• Shield cone damaged. 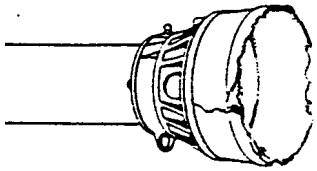	• Shield cone in contact with components on the tractor and/or implement. • Excessive angularity.	• Eliminate interference between Shield cones and any part on the tractor and/or implement. • Avoid excessive angle during cornering or when lifting or lowering the implement. • Replace damaged Shield cones.
	• Shield tubes damaged (deformed and split at one side). 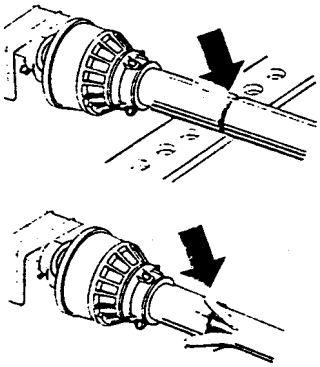	• Shields in contact with components on the tractor and/or implement. • Shield tubes overlap too short or no overlap at all with extended driveline.	• Eliminate interference between Shield cones and any part on the tractor and/or implement. • Replace damaged tubes. • Adjust Shield tubes length with longer tubes.

Note: Shield bearings must be greased every 8 working hours.

INTRODUCTION

All parts are illustrated in "exploded views" which show the individual parts in their normal relationship to each other. Reference numbers are used in the illustrations. These numbers correspond to those in the "Reference Number" (REF) column, and are followed by the description and quantity required.

O/L - "Obtain Locally" in the part number column indicates common hardware that is available at your local hardware supply.

All reference to right and left, forward or rearward, are from the operator standing behind the machine.

Orders must give the complete description, correct part number, the total amount required, the serial number, the method of shipment and the shipping address.

The manufacturer reserves the rights to change, modify, or eliminate from time to time, for technical or other reasons, certain or all data, specifications, or the product or products themselves, without any liability or obligation.

The parts listed here are available through your local dealer.

SNOWBLOWERS - B48, B54 & B64

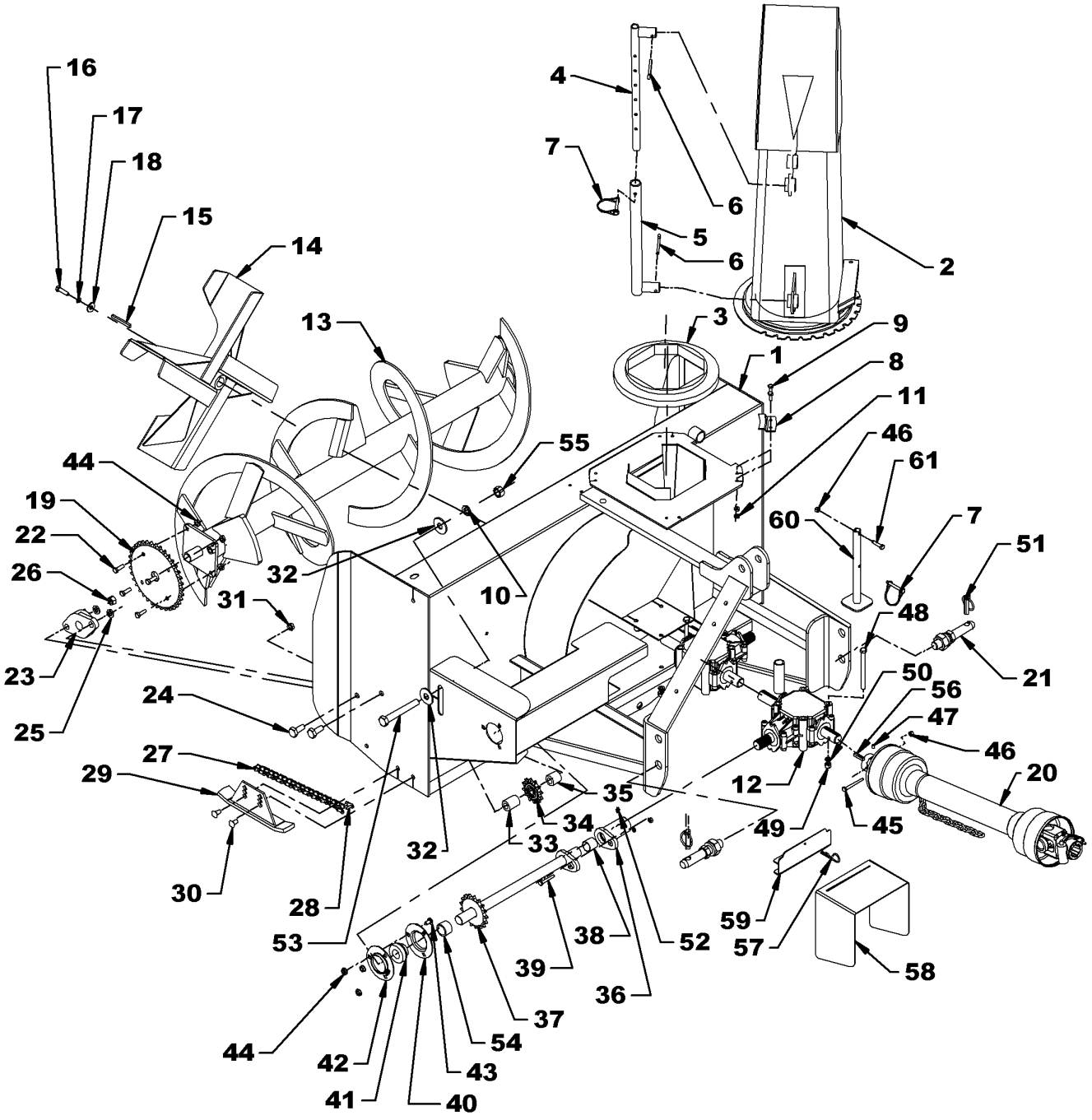

SNOWBLOWERS - B48, B54 & B64

REF.	DESCRIPTION	QTY	PART #
1	Housing	1	---
2	Chute assembly (including adjustment tube and rod)	1	664793
3	Rotation bushing	1	659151
4	Adjustment rod	1	654074
5	Adjustment tube	1	654076
6	Cotter pin Ø1/4" x 2" PTD	2	O/L
7	Round wire lock pin 1/4" x 2" PTD	2	1900006
8	Retaining plate	4	659146
9	Bolt hex. 1/4" NC x 3/4" gr.5 PTD	8	O/L
10	Lockwasher 5/8" PTD	1	O/L
11	Serrated flange nut 1/4" NC PTD	8	O/L
12	Gearbox	1	4500039
13	Auger – B48	1	667636
	Auger – B54	1	668434
	Auger – B64	1	668445
14	Fan	1	667637
15	Key 1/4" x 1/4" x 2 1/2" lg	1	660924
16	Bolt hex. 5/16" NC x 1 1/4" gr.5 PTD	1	O/L
17	Lockwasher 5/16" PTD	1	O/L
18	Flat washer (hole 7/16" diam.)	1	O/L
19	Sprocket #50A36	1	3300014
20	Driveline, series 20	1	4700100
21	Hitch pin Cat. 1	2	654196
22	Bolt hex. 5/16" NC X 1" gr.5 PTD	4	O/L
23	Bearing 1" hole, 2 holes	2	4300025
24	Bolt hex. 1/2" NC x 1 1/4" gr.5 PTD	4	O/L
25	Lockwasher 1/2" PTD	4	O/L
26	Nut hex. 1/2" NC PTD	4	O/L
27	Chain #50 x 84 links incl. connecting link.	1	3300016
28	Connecting link #50	1	655837
29	Skid shoes, adjustable	2	665664
30	Bolt carriage 3/8" x 3/4" gr.5 PTD	4	0300007
31	Serrated flange nut 3/8" NC black	4	O/L
32	Flat washer 5/8" (hole 11/16" diam.)	2	O/L
33	Spacer 1 13/32" lg	1	668111
34	Sprocket #H50A12	1	655426
35	Spacer 1 1/8" lg	1	668112
36	Shear plate	1	667639
37	Driving shaft – B48	1	667638
	Driving shaft – B54	1	668435
	Driving shaft – B64	1	668446
38	Oilite bushing	1	4300055

-

SNOWBLOWERS - B48, B54 & B64

REF.	DESCRIPTION	QTY	PART #
39	Shear bolt hex. 1/4" NC x 1 3/4" gr.5, with nut PTD	1	663837
40	Flange with grease slot	1	4300030
41	Bearing 1" hole with locking collar	1	4300038
42	Flange, 3 holes with grease fitting and groove	1	4300031
43	Bolt carriage 5/16" x 5/8" gr.5 PTD	3	0300001
44	Serrated flange nut 5/16" NC PTD	7	O/L
45	Bolt hex. 1/4" NC x 2 1/2" gr.5 PTD	1	O/L
46	Nylon insert locknut 1/4" NC PTD	2	O/L
47	Allen setscrew 1/4" NC x 3/8" gr.5 black	1	0500005
48	Bolt hex. 3/8" NC x 4 1/2" gr.5 PTD	4	O/L
49	Nut hex. 3/8" NC PTD	4	O/L
50	Lockwasher 3/8" PTD	4	O/L
51	Linchpin 7/16" PTD	2	1900003
52	Grease fitting 1/4" NF	1	654106
53	Bolt hex. 5/8" NC x 4 1/2" gr.5 PTD	1	O/L
54	Spacer 7/8" lg	1	668110
55	Nut hex. 5/8" - 11 NC PTD	1	O/L
56	Key 1/4" x 1/4" x 1 3/4" lg	1	659579
57	Hairpin 3mm x 65 mm lg	1	1800004
58	Driveline shield	1	668057
59	Driveline shield bracket	1	668052
60	Parking Stand	1	668053
61	Bolt hex. 1/4" NC x 1 1/4" gr.5 PTD	1	O/L

GEARBOX - 4500039

REF.	DESCRIPTION	QTY	PART #
1	Casing	2	4500058
2	Bearing	2	4300059
3	Shim	2	661731
4	Input shaft	1	4500059
5	Shim	1	661733
6	Oil seal	3	661730
7	Snap ring	2	661734
8	Gear	1	4500061
9	Parallel key	1	660063
10	Output shaft	1	4500060
11	Bearing	2	4300058
12	Plug	1	661739
13	O-ring	1	661144
14	Allen socket head cap screw M8 x 1.25mm x 45mm – 8.8,.	8	0800036
15	Stover locknut M8 x 1.25mm - 8	8	0900063

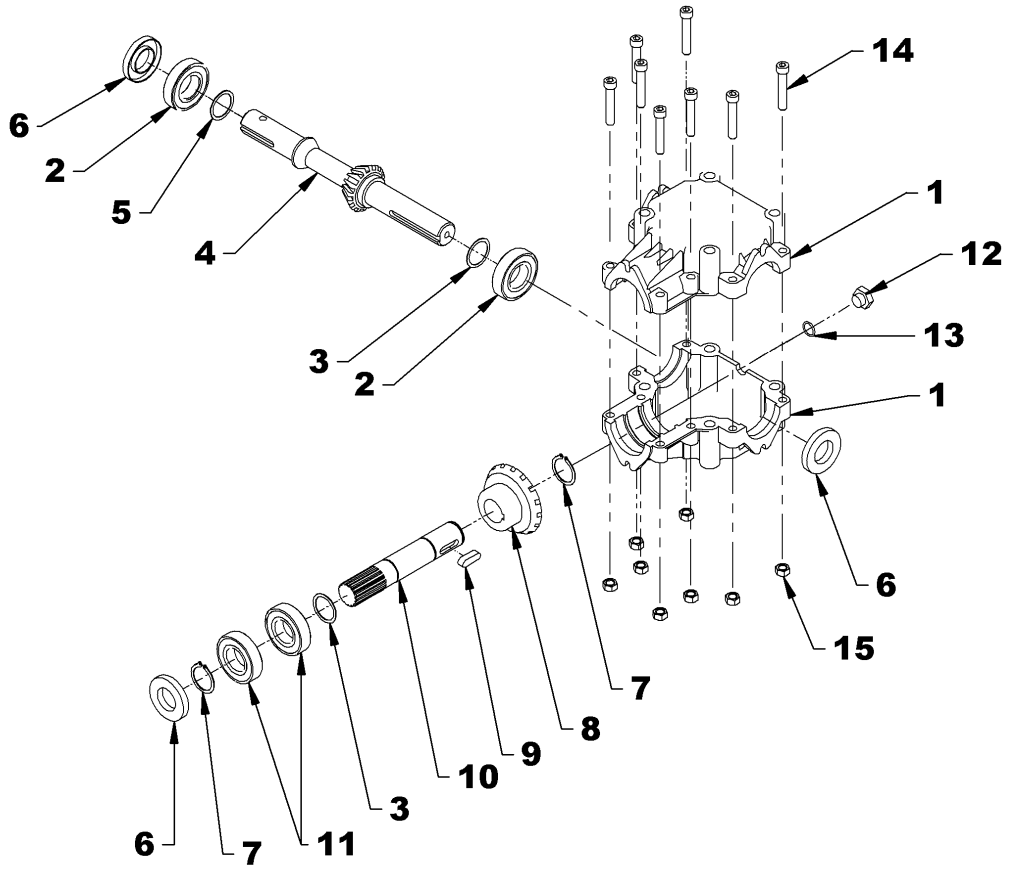

DRIVELINE– 4700100

REF.	DESCRIPTION	QTY	PART #
1	Yoke Ø 1"	1	4700113
2	Cross journal set	2	4700107
3	Inner yoke	1	4700111
4	Inner tube	1	4700112
5	Outer tube	1	4700109
6	Outer yoke	1	4700108
7	Yoke	1	4700104
8	Push pin set	1	664568
9	Shearbolt and nut	1	4700105
10	Ball Ø7/32"	24	4700106
11	Grease fitting	1	657198
12	Guard and safety chain	1	4700110
13	Roll pin for outer tube	1	4700062
14	Roll pin for inner tube	1	4700114

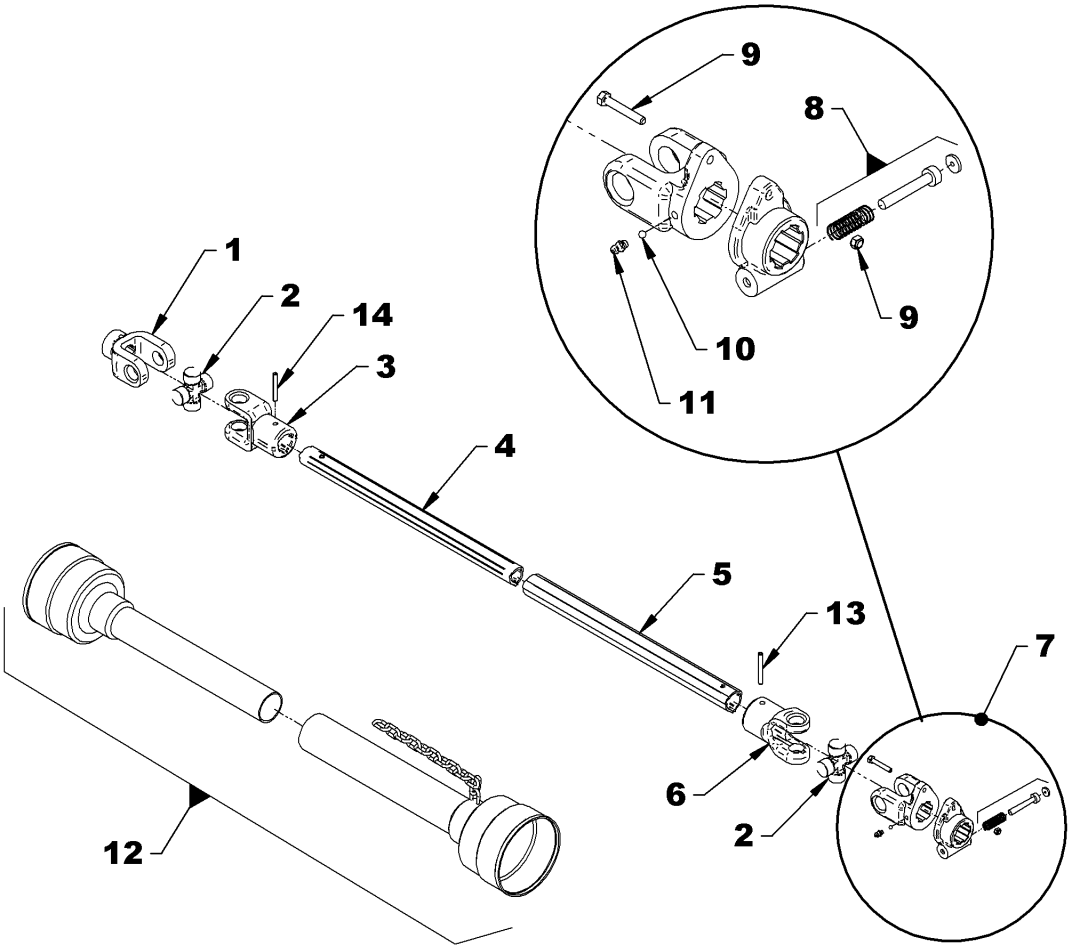

WARRANTY

RADTECH warrants to the original buyer that the equipment is free from defects in material and workmanship. RADTECH's obligation, under this warranty, will be limited to the repair or replacement of any non-wear part or component, which RADTECH finds to be defective within **one year** from the date of original purchase (unless otherwise-specified). The applicable warranty period for commercial or rental use shall be ninety (90) days from the date of purchase

In no event shall RADTECH be liable for consequential, special, direct or indirect damages incurred by the buyer/user.

All components not manufactured by RADTECH (such as motors, actuators, hydraulic components, tires, ...etc.) are covered by the original manufacturer's warranty in conjunction with RADTECH

RADTECH's obligation under this warranty shall be limited to repairing or replacing, free of charge to the original purchaser, any part that, in RADTECH's judgment, shall show evidence of such defect, provided the **distributor** returns the part prepaid within thirty (30) days from date of failure.

This warranty shall not be interpreted to render RADTECH liable for injuries or damages of any kind or nature to person or property. This warranty does not extend to losses because of delays, or to any expenses or losses incurred for labor, substitute machinery, rental or for any other reason.

Except as set forth above, RADTECH shall have no obligation or liability of any kind on account of any of its equipment and shall not be liable for special or consequential damages. RADTECH makes no other warranty, expressed or implied, and specifically, RADTECH disclaims any implied warranty or merchantability or fitness for a particular purpose**. Some states or provinces do not permit limitations or exclusions of implied warranties or incidental or consequential damages, so the limitations or exclusions in this warranty may not apply.**

This warranty is subject to any existing conditions of supply, which may directly affect our ability to obtain materials or manufacture replacement parts. RADTECH reserves the right to make improvements in design or changes in specifications at any time, without incurring any obligation to owners of units previously sold.

No one is authorized to alter, modify or enlarge this warranty nor the exclusions, limitations and reservations.

2835 Chemin de l'Aéroport, Thetford Mines (Québec) G6G 5R7

Tel.: (418) 338-4499 Fax: (418) 388-6090
Internet : www.radinter.com e-mail : radtech@radinter.com

TORQUE SPECIFICATION TABLE

GENERAL SPECIFICATION TABLE Use the following torques when special torques are not given. Note: These values apply to fasteners as received from supplier, when dry. These values do not apply if lubricants are used.		
BOLT SIZES (SAE)	**TORQUE**	
INCHES	**Pounds-Foot**	**Newton-Meters**
1/4	5	7
5/16	10	14
3/8	20	27
7/16	25	41
1/2	88	119
5/8	165	224
3/4	297	403
9/16	121	164
7/8	440	597
1	638	865
1 1/8	840	1139
1 1/4	1180	1600
1 3/8	1570	2129
1 1/2	2070	2807

BOLT SIZES (METRIC)	**TORQUE**	
MILLIMETERS	**Pounds-Foot**	**Newtons-Meter**
M6	10	13
M8	22	30
M10	40	54
M12	59	80
M14	93	126
M16	130	176
M18	168	228
M20	205	278

Manufactured by:

RADTECH
2835, Chemin de l'Aéroport
Thetford Mines, Québec, Canada, G6G 5R7
Tel.: (418) 338-4499 - Fax.: (418) 338-6090
e-mail : radtech@radinter.com
Internet : www.radinter.com

Printed in Canada